UNIVERSITY OF CAMBRIDGE INTERNATIONAL EXAMINATIONS
General Certificate of Education Advanced Level

CANDIDATE NAME

CENTRE NUMBER

CANDIDATE NUMBER

7589852002

PHYSICS **9702/43**

Paper 4 A2 Structured Questions **October/November 2013**

2 hours

Candidates answer on the Question Paper.

No Additional Materials are required.

READ THESE INSTRUCTIONS FIRST

Write your Centre number, candidate number and name on all the work you hand in.
Write in dark blue or black pen.
You may use a pencil for any diagrams, graphs or rough working.
Do not use staples, paper clips, highlighters, glue or correction fluid.
DO **NOT** WRITE IN ANY BARCODES.

Answer **all** questions.

Electronic calculators may be used.
You may lose marks if you do not show your working or if you do not use appropriate units.

At the end of the examination, fasten all your work securely together.
The number of marks is given in brackets [ ] at the end of each question or part question.

For Examiner's Use	
1	
2	
3	
4	
5	
6	
7	
8	
9	
10	
11	
12	
Total	

This document consists of **23** printed pages and **1** blank page.

© UCLES 2013

Data

speed of light in free space, $c = 3.00 \times 10^{8}\ \text{m s}^{-1}$

permeability of free space, $\mu_0 = 4\pi \times 10^{-7}\ \text{H m}^{-1}$

permittivity of free space, $\varepsilon_0 = 8.85 \times 10^{-12}\ \text{F m}^{-1}$

$$\left(\frac{1}{4\pi\varepsilon_0} = 8.99 \cdot\ 10^{9}\ \text{m F}^{-1}\right)$$

elementary charge, $e = 1.60 \times 10^{-19}\ \text{C}$

the Planck constant, $h = 6.63 \times 10^{-34}\ \text{J s}$

unified atomic mass constant, $u = 1.66 \times 10^{-27}\ \text{kg}$

rest mass of electron, $m_e = 9.11 \times 10^{-31}\ \text{kg}$

rest mass of proton, $m_p = 1.67 \times 10^{-27}\ \text{kg}$

molar gas constant, $R = 8.31\ \text{J K}^{-1}\ \text{mol}^{-1}$

the Avogadro constant, $N_A = 6.02 \times 10^{23}\ \text{mol}^{-1}$

the Boltzmann constant, $k = 1.38 \times 10^{-23}\ \text{J K}^{-1}$

gravitational constant, $G = 6.67 \times 10^{-11}\ \text{N m}^2\ \text{kg}^{-2}$

acceleration of free fall, $g = 9.81\ \text{m s}^{-2}$

© UCLES 2013

Formulae

uniformly accelerated motion, $s = ut + \frac{1}{2}at^2$
$v^2 = u^2 + 2as$

work done on/by a gas, $W = p\Delta V$

gravitational potential, $\phi = -\frac{Gm}{r}$

hydrostatic pressure, $p = \rho gh$

pressure of an ideal gas, $p = \frac{1}{3}\frac{Nm}{V}\langle c^2 \rangle$

simple harmonic motion, $a = -\omega^2 x$

velocity of particle in s.h.m., $v = v_0 \cos \omega t$
$v = \pm \omega\sqrt{(x_0^2 - x^2)}$

electric potential, $V = \frac{Q}{4\pi\varepsilon_0 r}$

capacitors in series, $1/C = 1/C_1 + 1/C_2 + \ldots$

capacitors in parallel, $C = C_1 + C_2 + \ldots$

energy of charged capacitor, $W = \frac{1}{2}QV$

resistors in series, $R = R_1 + R_2 + \ldots$

resistors in parallel, $1/R = 1/R_1 + 1/R_2 + \ldots$

alternating current/voltage, $x = x_0 \sin \omega t$

radioactive decay, $x = x_0 \exp(-\lambda t)$

decay constant, $\lambda = \frac{0.693}{t_{\frac{1}{2}}}$

© UCLES 2013

[Turn over

Section A

Answer **all** the questions in the spaces provided.

1 **(a)** State Newton's law of gravitation.

.....

.....

.....[2]

(b) A star and a planet are isolated in space. The planet orbits the star in a circular orbit of radius *R*, as illustrated in Fig. 1.1.

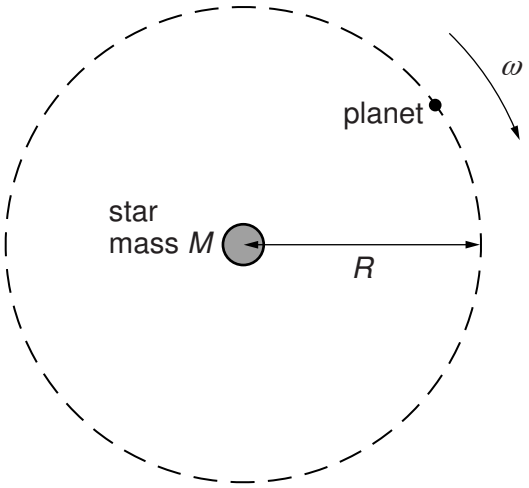

Fig. 1.1

The angular speed of the planet about the star is ω.
By considering the circular motion of the planet about the star of mass *M*, show that ω and *R* are related by the expression

$$R^3\omega^2 = GM$$

where *G* is the gravitational constant. Explain your working.

[3]

(c) The Earth orbits the Sun in a circular orbit of radius 1.5×10^8 km. The mass of the Sun is 2.0×10^{30} kg.
A distant star is found to have a planet that has a circular orbit about the star. The radius of the orbit is 6.0×10^8 km and the period of the orbit is 2.0 years.

Use the expression in **(b)** to calculate the mass of the star.

mass = ... kg [3]

2 **(a)** **(i)** State what is meant by the *internal energy* of a system.

.....

.....

.....[2]

(ii) Explain why, for an ideal gas, the internal energy is equal to the total kinetic energy of the molecules of the gas.

.....

.....

.....[2]

(b) The mean kinetic energy $<E_K>$ of a molecule of an ideal gas is given by the expression

$$<E_K> = \frac{3}{2}kT$$

where k is the Boltzmann constant and T is the thermodynamic temperature of the gas.

A cylinder contains 1.0 mol of an ideal gas. The gas is heated so that its temperature changes from 280 K to 460 K.

(i) Calculate the change in total kinetic energy of the gas molecules.

change in energy = ... J [2]

© UCLES 2013

(ii) During the heating, the gas expands, doing 1.5×10^3 J of work.
State the first law of thermodynamics. Use the law and your answer in **(i)** to determine the total energy supplied to the gas.

.....

.....

total energy = ... J [3]

3 **(a)** Define *electric potential* at a point.

.....

.....

.....[2]

(b) Two point charges A and B are separated by a distance of 20 nm in a vacuum, as illustrated in Fig. 3.1.

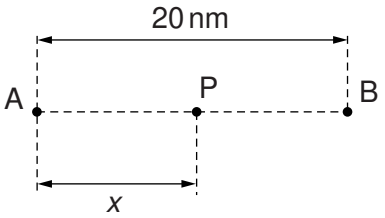

Fig. 3.1

A point P is a distance x from A along the line AB.
The variation with distance x of the electric potential V_A due to charge A alone is shown in Fig. 3.2.

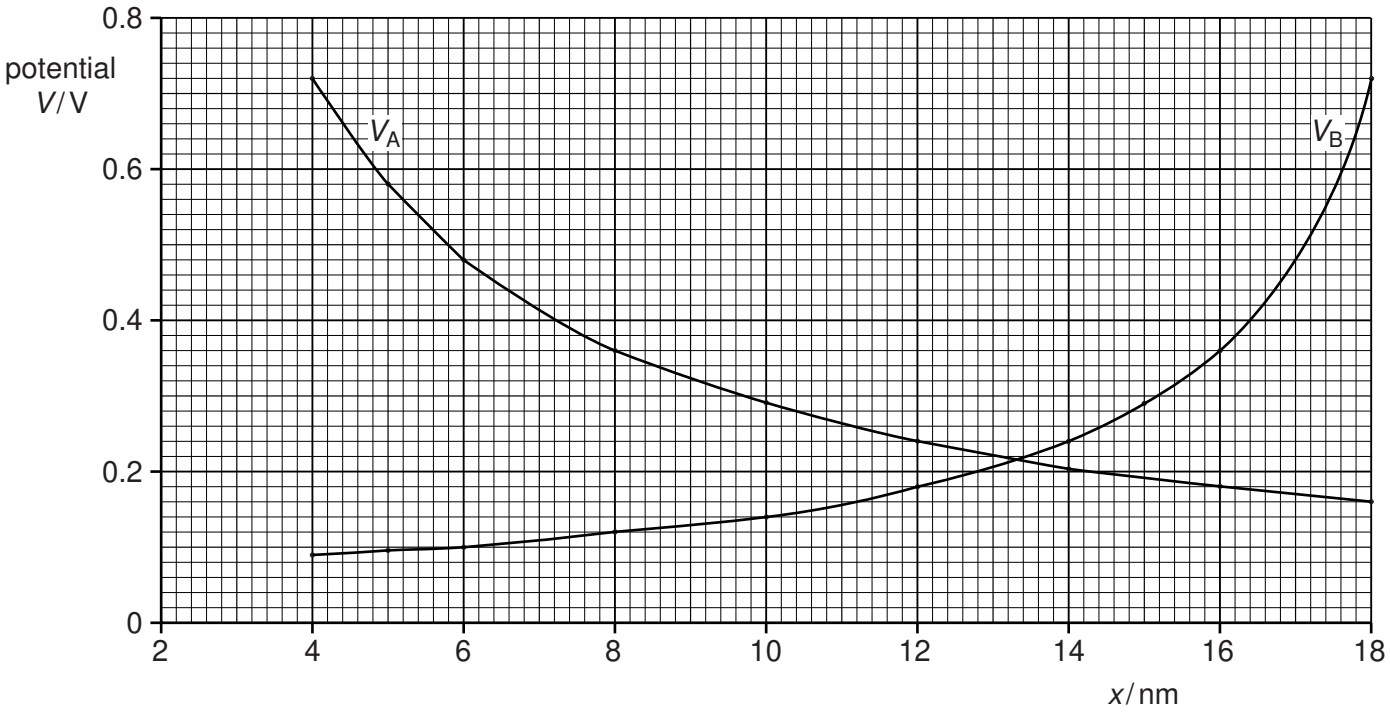

Fig. 3.2

The variation with distance x of the electric potential V_B due to charge B alone is also shown in Fig. 3.2.

© UCLES 2013

(i) State and explain whether the charges A and B are of the same, or opposite, sign.

.....

.....

.....[2]

(ii) By reference to Fig. 3.2, state how the combined electric potential due to both charges may be determined.

.....

.....[1]

(iii) Without any calculation, use Fig. 3.2 to estimate the distance x at which the combined electric potential of the two charges is a minimum.

x = ... nm [1]

(iv) The point P is a distance $x = 10$ nm from A.
An α-particle has kinetic energy E_K when at infinity.

Use Fig. 3.2 to determine the minimum value of E_K such that the α-particle may travel from infinity to point P.

E_K = ... J [3]

4 **(a)** State two functions of capacitors connected in electrical circuits.

1. .....

.....

2. .....

.....

[2]

(b) Three capacitors are connected in parallel to a power supply as shown in Fig. 4.1.

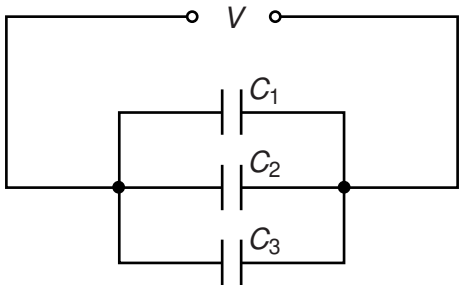

Fig. 4.1

The capacitors have capacitances C_1, C_2 and C_3. The power supply provides a potential difference V.

(i) Explain why the charge on the positive plate of each capacitor is different.

.....

.....

.....[1]

(ii) Use your answer in **(i)** to show that the combined capacitance C of the three capacitors is given by the expression

$$C = C_1 + C_2 + C_3.$$

[2]

(c) A student has available three capacitors, each of capacitance 12 μF.
Draw circuit diagrams, one in each case, to show how the student connects the three capacitors to provide a combined capacitance of

(i) 8 μF,

[1]

(ii) 18 μF.

[1]

5 A uniform magnetic field of flux density B makes an angle θ with a flat plane PQRS, as shown in Fig. 5.1.

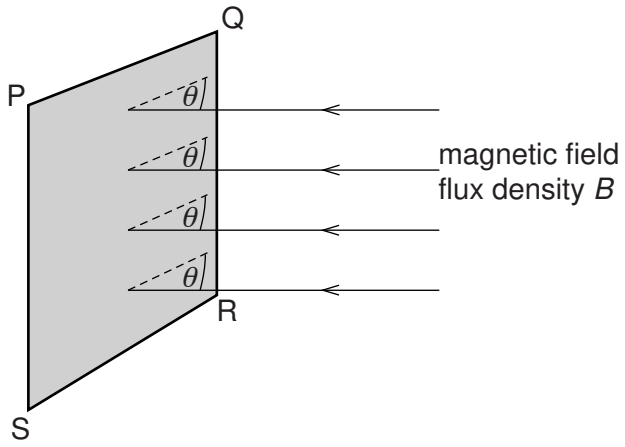

Fig. 5.1

The plane PQRS has area A.

(a) State

(i) what is meant by a *magnetic field*,

.....

.....[1]

(ii) an expression, in terms of A, B and θ, for the magnetic flux Φ through the plane PQRS.

.....[1]

(b) A vertical aluminium window frame DEFG has width 52 cm and length 95 cm, as shown in Fig. 5.2.

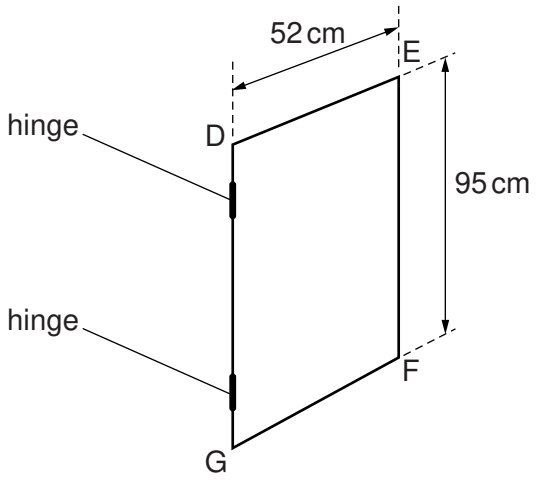

Fig. 5.2

The frame is hinged along the vertical edge DG.
The horizontal component B_H of the Earth's magnetic field is 1.8×10^{-5} T. For the closed window, the frame is normal to the horizontal component B_H.
The window is opened so that the plane of the window rotates through 90°.

(i) Explain why, when the window is opened, the change in magnetic flux linkage due to the vertical component of the Earth's magnetic field is zero.

.....

.....[1]

(ii) Calculate, for the window opening through an angle of 90°, the change in magnetic flux linkage.

change in flux linkage = ... Wb [2]

(c) (i) State Faraday's law of electromagnetic induction.

.....

.....

.....[2]

(ii) The window in **(b)** is opened in a time of 0.30 s.
Use your answer in **(b)(ii)** to calculate the average e.m.f. induced in the window frame.

e.m.f. = ... V [1]

(iii) State the sides of the window frame between which the e.m.f. is induced.

between side ..... and side ..... [1]

6 A particle has mass m and charge $+q$ and is travelling with speed v through a vacuum. The initial direction of travel is parallel to the plane of two charged horizontal metal plates, as shown in Fig. 6.1.

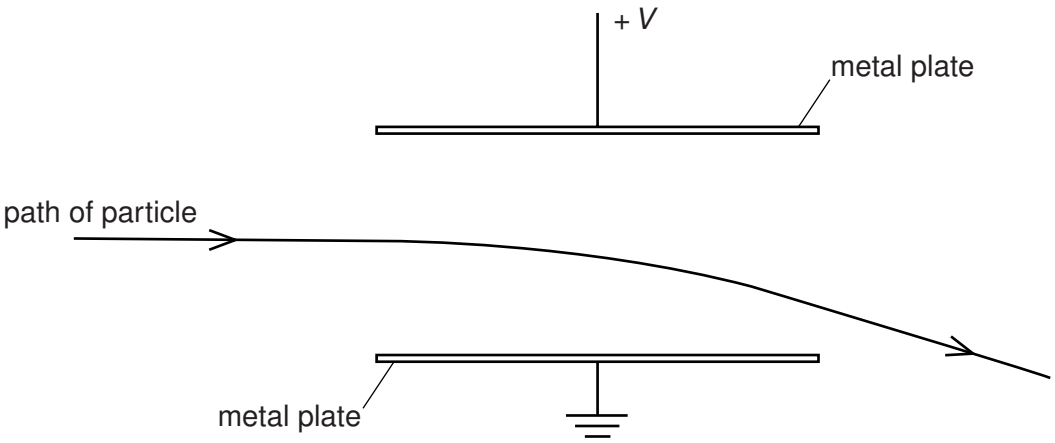

Fig. 6.1

The uniform electric field between the plates has magnitude $2.8 \times 10^4 \text{V m}^{-1}$ and is zero outside the plates.
The particle passes between the plates and emerges beyond them, as illustrated in Fig. 6.1.

(a) Explain why the path of the particle in the electric field is not an arc of a circle.

.....

.....

.....[1]

(b) A uniform magnetic field is now formed in the region between the metal plates. The magnetic field strength is adjusted so that the positively charged particle passes undeviated between the plates, as shown in Fig. 6.2.

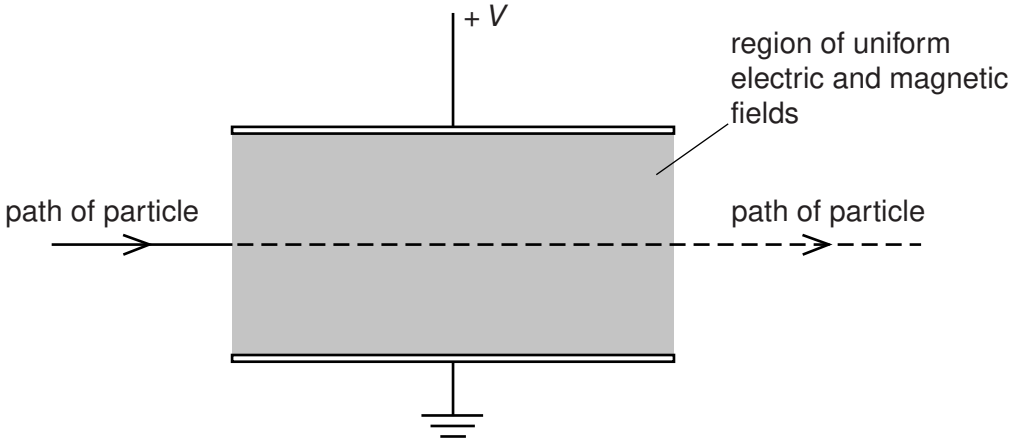

Fig. 6.2

© UCLES 2013

(i) State and explain the direction of the magnetic field.

.....

.....

.....[2]

(ii) The particle has speed $4.7 \times 10^5\,\text{m s}^{-1}$.
Calculate the magnitude of the magnetic flux density.
Explain your working.

magnetic flux density = ... T [3]

(c) The particle in **(b)** has mass m, charge $+q$ and speed v.
Without any further calculation, state the effect, if any, on the path of a particle that has

(i) mass m, charge $-q$ and speed v,

.....[1]

(ii) mass m, charge $+q$ and speed $2v$,

.....[1]

(iii) mass $2m$, charge $+q$ and speed v.

.....[1]

7 **(a)** By reference to the photoelectric effect, explain

(i) what is meant by *work function energy*,

.....

.....

.....[2]

(ii) why, even when the incident light is monochromatic, the emitted electrons have a range of kinetic energy up to a maximum value.

.....

.....

.....[2]

(b) Electromagnetic radiation of frequency f is incident on a metal surface. The variation with frequency f of the maximum kinetic energy E_{MAX} of electrons emitted from the surface is shown in Fig. 7.1.

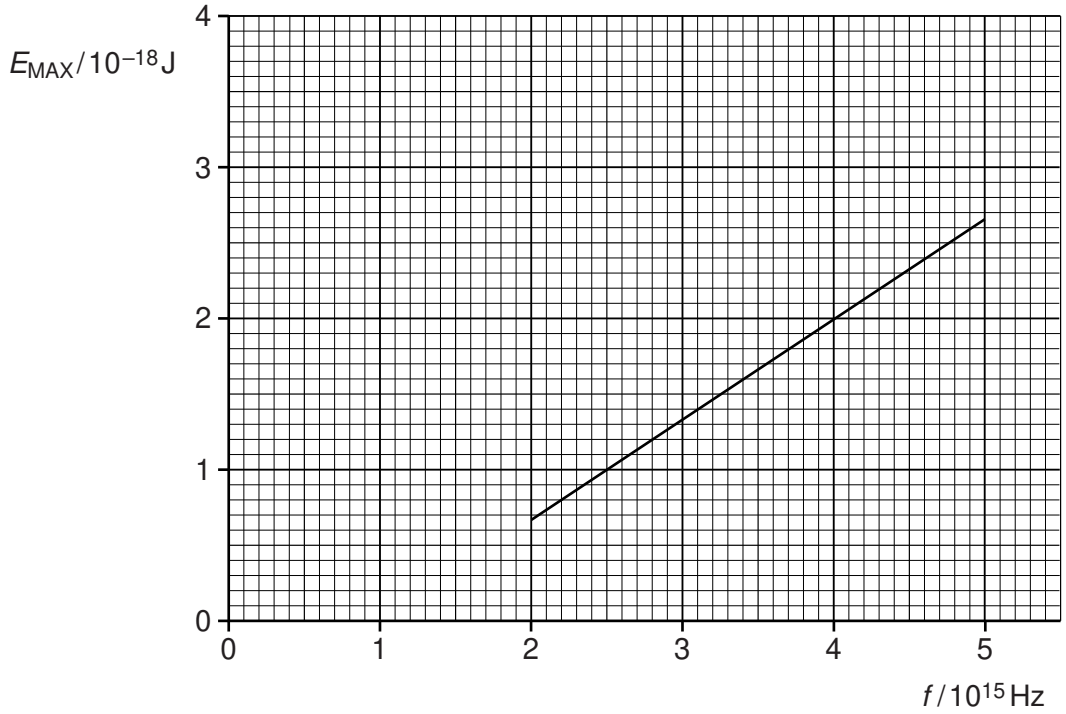

Fig. 7.1

(i) Use Fig. 7.1 to determine the work function energy of the metal surface.

work function energy = ... J [3]

(ii) A second metal has a greater work function energy than that in **(i)**.
On Fig. 7.1, draw a line to show the variation with f of E_{MAX} for this metal. [2]

(iii) Explain why the graphs in **(i)** and **(ii)** do not depend on the intensity of the incident radiation.

.....

.....

.....[2]

BLANK PAGE

© UCLES 2013

8 One possible nuclear fission reaction is

$$^{235}_{92}\text{U} + ^{1}_{0}\text{n} \rightarrow ^{141}_{56}\text{Ba} + ^{92}_{36}\text{Kr} + 3\,^{1}_{0}\text{n} + \text{energy}.$$

Barium-141 ($^{141}_{56}$Ba) and krypton-92 ($^{92}_{36}$Kr) are both β-emitters.
Barium-141 has a half-life of 18 minutes and a decay constant of $6.4 \times 10^{-4}\,\text{s}^{-1}$.
The half-life of krypton-92 is 3.0 seconds.

(a) State what is meant by *decay constant*.

.....

.....

.....[2]

(b) A mass of 1.2 g of uranium-235 undergoes this nuclear reaction in a very short time (a few nanoseconds).

(i) Calculate the number of barium-141 nuclei that are present immediately after the reaction has been completed.

number = ... [2]

(ii) Using your answer in **(b)(i)**, calculate the total activity of the barium-141 and the krypton-92 a time of 1.0 hours after the fission reaction has taken place.

activity = ... Bq [4]

Section B

Answer **all** the questions in the spaces provided.

9 **(a)** State three properties of an ideal operational amplifier (op-amp).

1. .....

2. .....

3. .....

[3]

(b) An amplifier circuit is shown in Fig. 9.1.

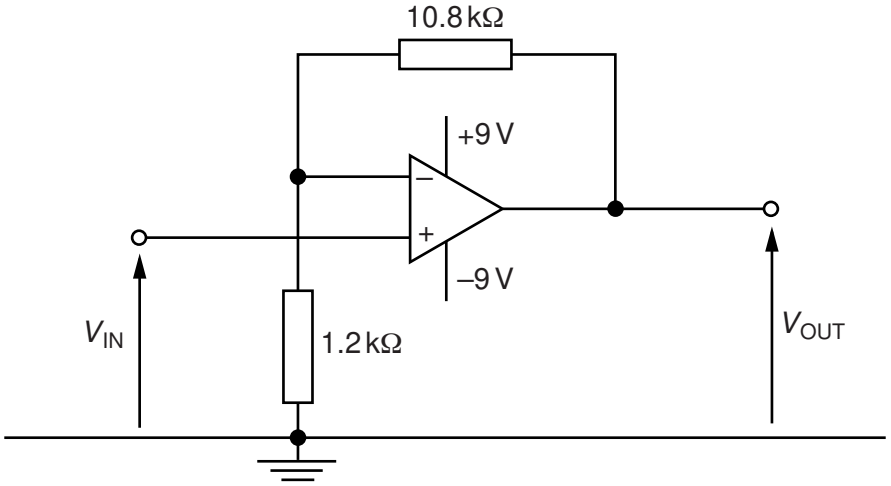

Fig. 9.1

(i) Calculate the gain of the amplifier circuit.

gain = ... [2]

(ii) The variation with time t of the input potential V_{IN} is shown in Fig. 9.2.

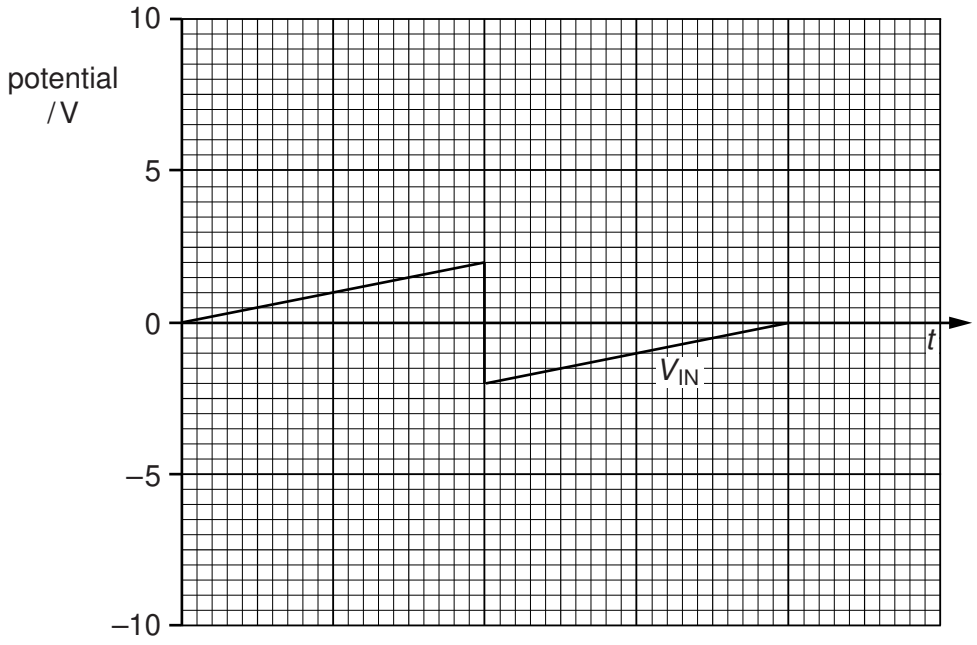

Fig. 9.2

On the axes of Fig. 9.2, show the variation with time t of the output potential V_{OUT}. [3]

10 Magnetic resonance imaging (MRI) requires the use of a non-uniform magnetic field superimposed on a large uniform magnetic field.

State and explain the purpose of

(a) the large uniform magnetic field,

.....

.....

.....

.....

.....[3]

(b) the non-uniform magnetic field.

.....

.....

.....

.....

.....[3]

11 Data may be transmitted in either analogue or digital form.

(a) State

(i) what is meant by a *digital* signal,

.....

.....

.....[2]

(ii) three advantages of the digital transmission of data when compared to analogue transmission.

1. .....

2. .....

3. .....

[3]

(b) The block diagram of Fig. 11.1 represents the digital transmission of music.

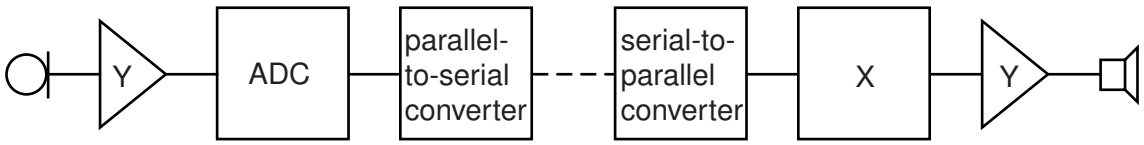

Fig. 11.1

(i) State the name of

1. the blocks labelled Y,

.....[1]

2. the block labelled X.

.....[1]

(ii) Describe the function of the parallel-to-serial converter.

.....

.....

.....[2]

12 (a) State two reasons why frequencies in the gigahertz (GHz) range are used in satellite communication.

1. .....

.....

2. .....

.....
[2]

(b) In one particular satellite communication system, the frequency of the signal transmitted from Earth to the satellite (the up-link) is 6 GHz. The frequency of the signal transmitted back to Earth from the satellite (the down-link) is 4 GHz.

Explain why the two signals are transmitted at different frequencies.

.....

.....

.....[2]

(c) A signal transmitted from Earth has a power of 3.1 kW.
This signal, received by a satellite, has been attenuated by 185 dB.

Calculate the power of the signal received by the satellite.

power = ... W [3]

Permission to reproduce items where third-party owned material protected by copyright is included has been sought and cleared where possible. Every reasonable effort has been made by the publisher (UCLES) to trace copyright holders, but if any items requiring clearance have unwittingly been included, the publisher will be pleased to make amends at the earliest possible opportunity.

University of Cambridge International Examinations is part of the Cambridge Assessment Group. Cambridge Assessment is the brand name of University of Cambridge Local Examinations Syndicate (UCLES), which is itself a department of the University of Cambridge.